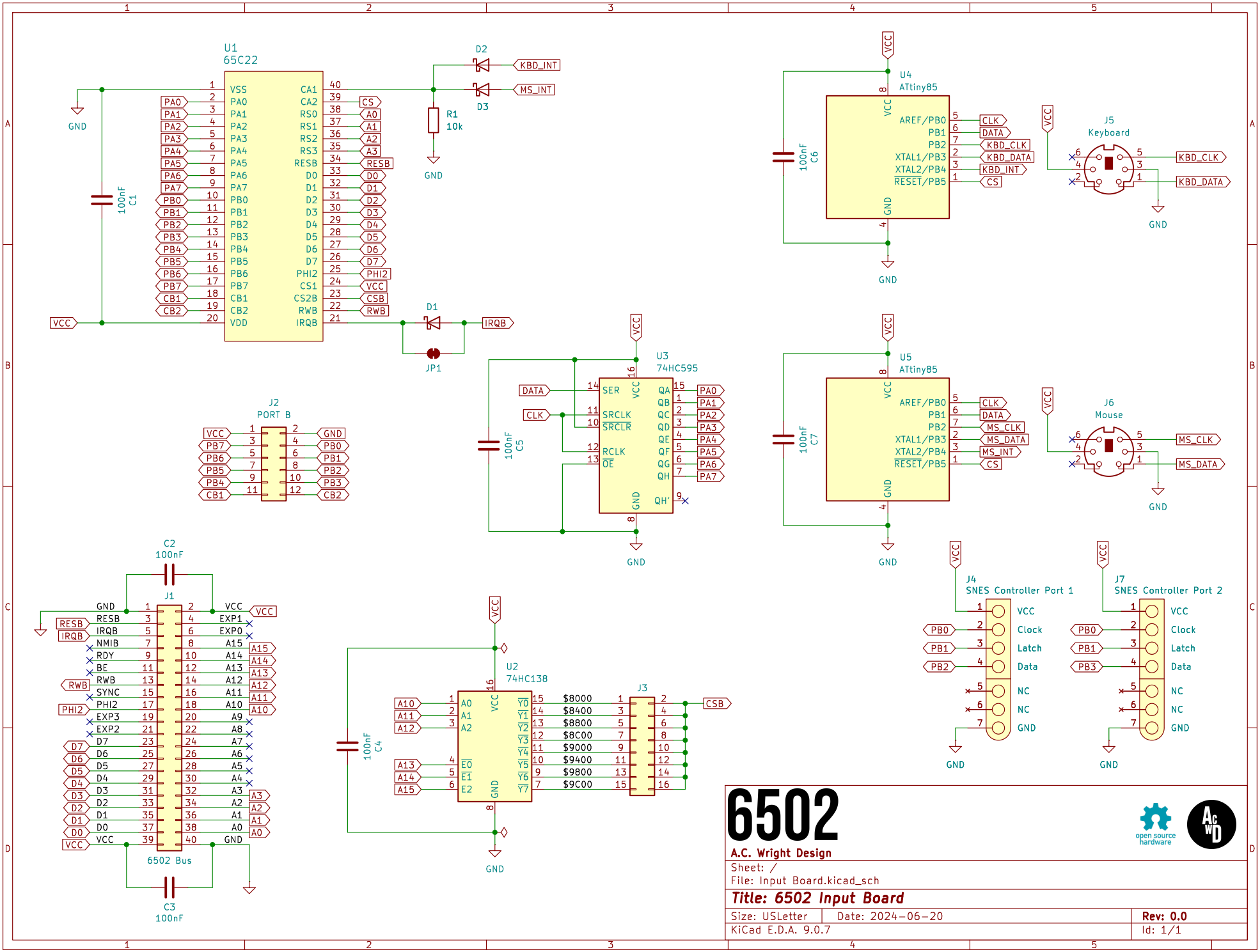
U1
65C22
VSS
PA0
PA1
PA2
PA3
PA4
PA5
PA6
PA7
PB0
PB1
PB2
PB3
PB4
PB5
PB6
PB7
CB1
CB2
VDD
CA1
CA2
RS0
RS1
RS2
RS3
RESB
D0
D1
D2
D3
D4
D5
D6
D7
PHI2
CS1
CS2B
RWB
IRQB
CS
A0
A1
A2
A3
VCC
CSB
GND
100nF
C1
R1
10k
D2
D3
KBD_INT
MS_INT
D1
JP1
IRQB
J2
PORT B
U4
ATtiny85
AREF/PB0
XTAL1/PB3
XTAL2/PB4
RESET/PB5
CLK
DATA
KBD_CLK
KBD_DATA
100nF
C6
J5
Keyboard
U3
74HC595
SER
SRCLK
SRCLR
RCLK
OE
QA
QB
QC
QD
QE
QF
QG
QH
QH'
100nF
C5
U5
ATtiny85
MS_CLK
MS_DATA
100nF
C7
J6
Mouse
C2
100nF
J1
EXP1
EXP0
NMIB
SYNC
EXP3
EXP2
A15
A14
A13
A12
A11
A10
A9
A8
A7
A6
A5
A4
A3
A2
A1
A0
6502 Bus
C3
100nF
U2
74HC138
E0
E1
E2
Y0
Y1
Y2
Y3
Y4
Y5
Y6
Y7
$8000
$8400
$8800
$8C00
$9000
$9400
$9800
$9C00
J3
100nF
C4
J4
SNES Controller Port 1
Clock
Latch
Data
NC
J7
SNES Controller Port 2
6502
A.C. Wright Design
Sheet: /
File: Input Board.kicad_sch
Title: 6502 Input Board
Size: USLetter
Date: 2024-06-20
Rev: 0.0
KiCad E.D.A. 9.0.7
Id: 1/1